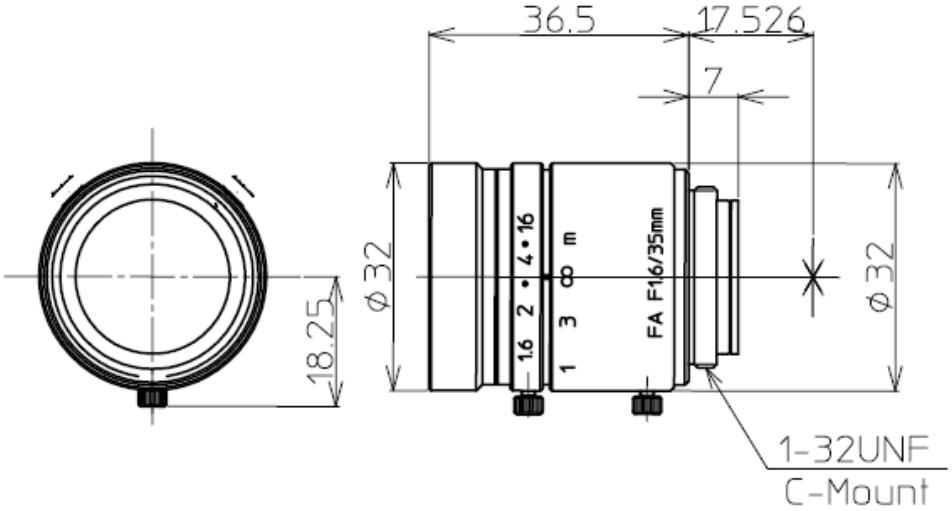

2/3" 1.6/35mm C		1/2"	1/3"
FOCAL LENGTH	f=35mm		
MAX. DIAMETER (RATIO)	F=1:1.6~16		
ELEMENT	4Gp 6 Element		
PICTURE SIZE	6.6x8.8mm	4.8x6.4	4.8x3.6
ANGLE VER. ANGLE	10.8°	7.9°	5.9°
HOR. ANGLE	14.4°	10.5°	7.9°
DIA. ANGLE	17.9°	13.1°	9.8°
DISTORTION	-0.21%	---	---
SHOOTING RANGE AT VER.	94.7 mm	68.8	51.6
MINIMUM FOCUS HOR.	126.6mm	91.9	68.8
DISTANCE DIA.	158.7mm	115.0	86.1
MINIMUM FOCUS DISTANCE	0.35m		
FLANGE BACK	17.526 mm in air		
BACK FOCUS	14.9mm in air		
FILTER SCREW SIZE	M30.5x0.5		
FRONT/REAR EFFECTIVE DIA.	Front Ø21.7mm Rear Ø12.9mm		
MOUNT	C-MOUNT		
EXIT PUPIL	-40.6mm		
TEMPERATURE RANGE	-10~+45° C		
STORAGE TEMPERATURE RANGE	-40~+60° C		
RESOLUTION CENTER/CORNER	Center 100LP/mm Corner 60LP/mm		

		LM35JC		
		2/3" F1.6 f=35mm		